AIRLINE™ LOUVERS

GS4V30H

STANDARD MATERIALS AND CONSTRUCTION

FRAME: 18-GA. galvanized steel, channel or flanged type.
BLADE: 18-GA. galvanized steel. Blades approximately 3” on centers.
SCREEN: (when indicated)
½” sq. mesh, 19-GA. galvanized steel, .041”.
CONSTRUCTION: Riveted and/or welded for maximum service.

OPTIONS

Frames and Blades of other gauges
Other materials - Stainless steel, Copper, Aluminum, etc.
Finishes - Enamels, Epoxies, etc.
Screens - Insect screen 18/14 aluminum mesh,
-or- ½” flattened aluminum, .051”,
-or- ¼” sq. mesh, 18-GA galvanized steel, .047”,
-or- ½” sq. mesh, 18-GA stainless steel, .047”,
Others available.

NOTES

1. Nominal deductions will be made to the opening size given.
2. Approximate shipping weight is 10 lbs./sq.ft.

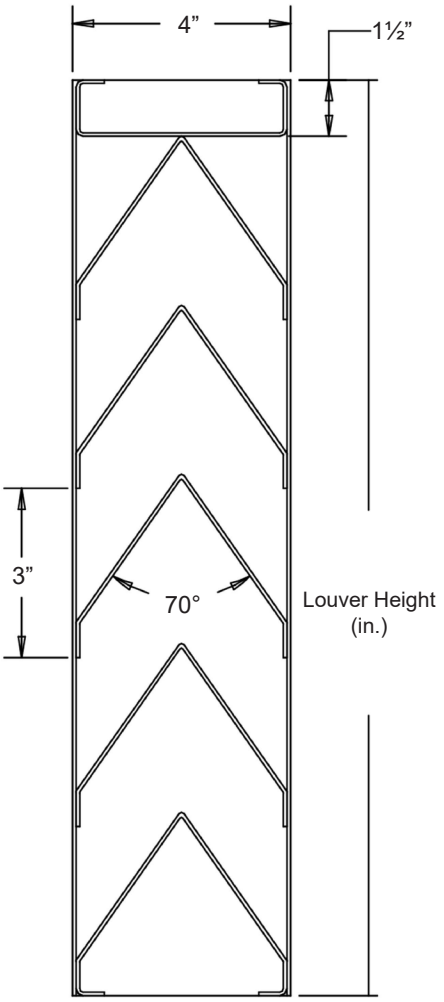

Not to scale.

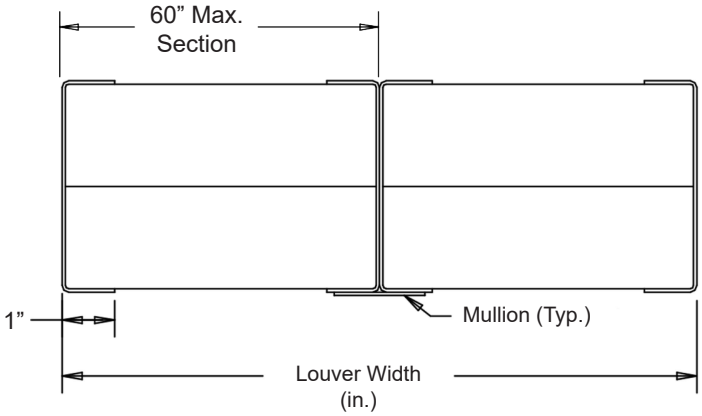

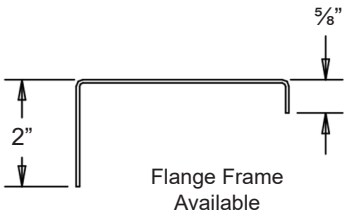

In the interest of product development, Airline Louvers reserves the right to make changes without notice.

Item #	**Qty**	Width	Height	Width	Height	**Mullion**	Type	Location		
		Opening Size		**Louver Size**			**Screens**			**Union Made**
Arch. / Eng. :						**EDR:**		**ECN:**		**Job:**
Contractor:										
Project:						**Date:**		**DWN:**		**DWG:**

1020 Prince Frederick Blvd. Suite 305 • Prince Frederick, MD 20687 • Phone: (570) 420-7079 • Fax: (570) 420-7078